NOTES:

1. PLEASE VERIFY VOLTAGE, PHASE & MOUNTING.
2. ALL OPTIONAL ARE AT ADDED COST.
3. A CLEARANCE OF 6" SHOULD BE ALLOWED FOR ACCESS TO ELECTRIC BOX.
4. CONTROL VOLTAGE IS A NEC CLASS 2 CIRCUIT.
5. AVERAGE DOOR TRAVEL SPEED VARIES PER DRUM USED.
6. OPERATOR MOUNTING BRACKETS MOUNT TO WALL.

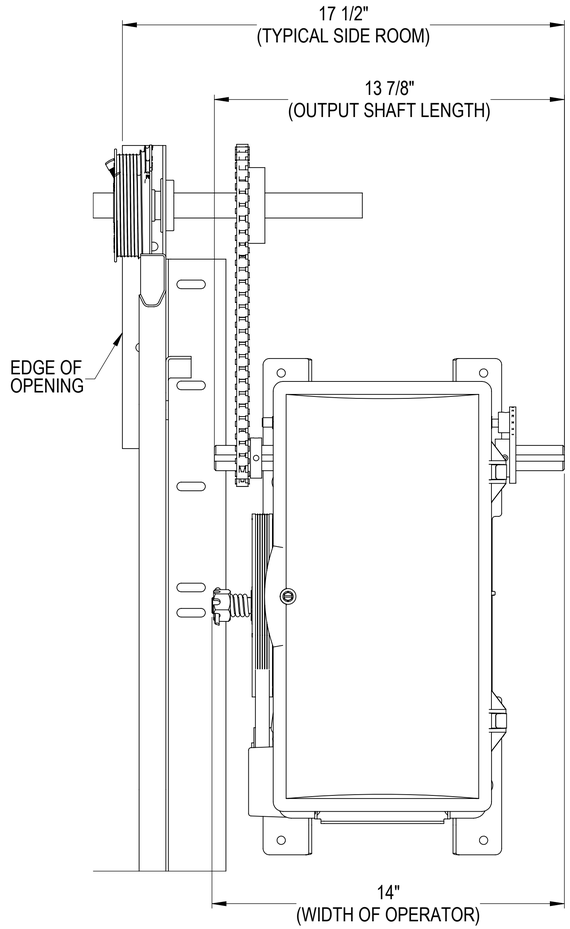

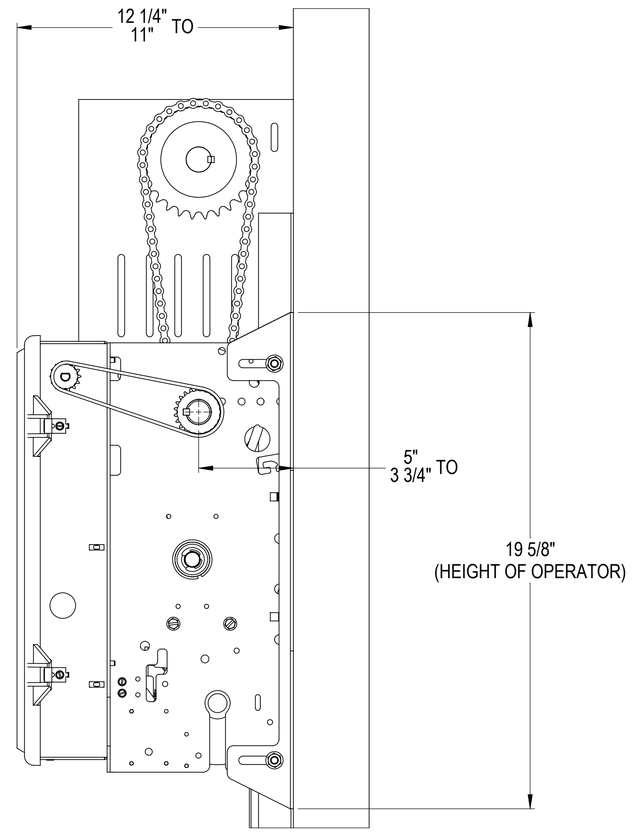

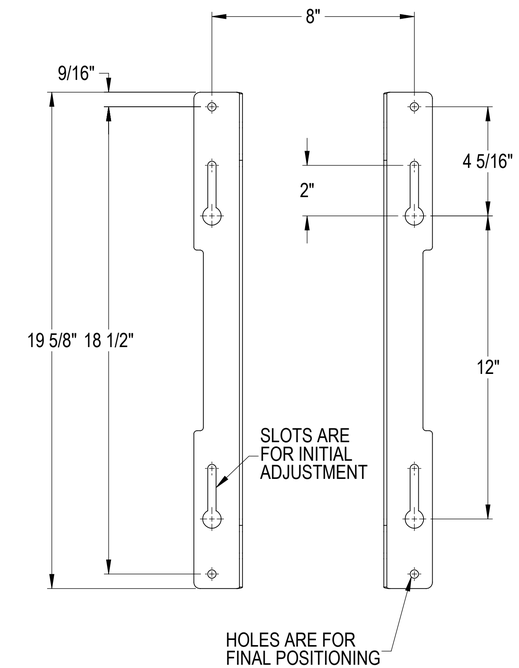

MOUNTING BRACKETS

ELECTRIC OPERATOR:	GCL-MJ (MEDIUM DUTY)
DOOR TYPE:	SECTIONAL
MOUNTING TYPE:	SIDEMOUNT CHAIN COUPLE
PROJECT:	
ARCHITECT:	
CONTRACTOR:	
DISTRIBUTOR:	
PLANT:	
DRAWN BY:	DATE:
APPROVED BY:	DATE:
DWG NO.	SHT ___ OF ___
ENG. CERT. NO.	
112380.0001 REV.-	GENIE

ARCHITECT DOOR NUMBER	QTY	FACTORY ORDER NUMBER	MOUNT TYPE	VOLTS					PHASE		CONTROL STATION		
			SIDEMOUNT CHAIN COUPLE	115	208	230	460	575	1 PHASE	3 PHASE	3 BTN	KEY SWITCH	EXT. FLUSH 3 BUTTON