Halogen Light - Steady On

Part Number: 110347.000X.S

Description

Red (X=1), green (X=2), or amber (X=3) steady on halogen light
(Replace X in part number for wanted color part number)

Features

NEMA 4X Enclosure
18” Wire Leads
Panel or Conduit Mounting

Specifications

Light Rating: 115 VAC

Wiring Information

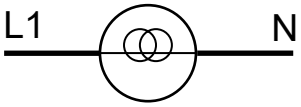

Agency Approvals

UL 1638 Listed
CSA Certified C22.2 NO. 205

Technical Drawings

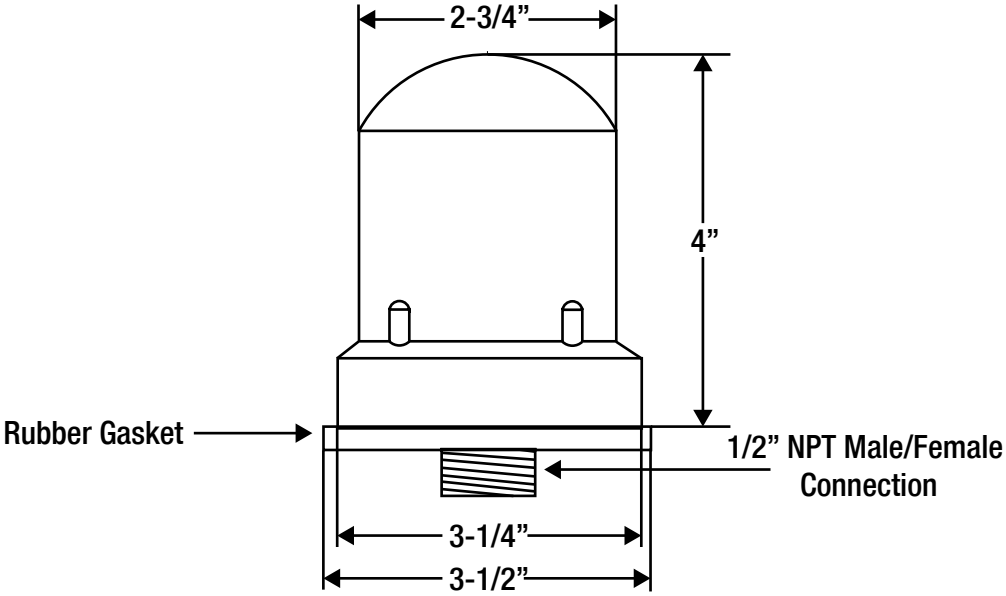

©2021 The Genie Company | Genie 110347.000X.S Spec Sheet